ST5918L3008-LA1 HYBRID STEPPING MOTOR

specifications:

MODEL	PHASE	STEP ANGLE	RATED VOLTAGE	CURRENT /PHASE	RESISTANCE /PHASE	INDUCTANCE /PHASE	HOLDING TORQUE	DETENT TORQUE	ROTOR INERTIA	WEIGHT
		DEG/STEP	V	A	ohms	mH	kg.cm	N.cm	g.cm²	Kg
	unipolar	1.8	3.0	3	1.0	2.2	14	6.8	480	1.0
	series		4.2	2.1	2.0	8.8	19.6			
	parallel		2.1	4.2	0.5	2.2				

Wiring Diagram:

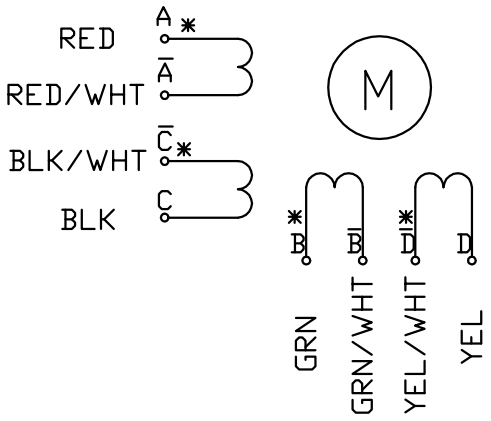

SEE FROM REAR SHAFT END

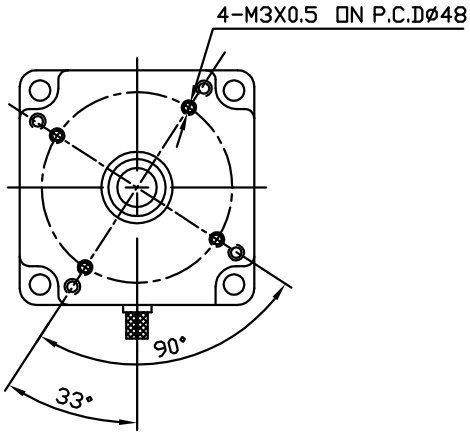

Dimension:

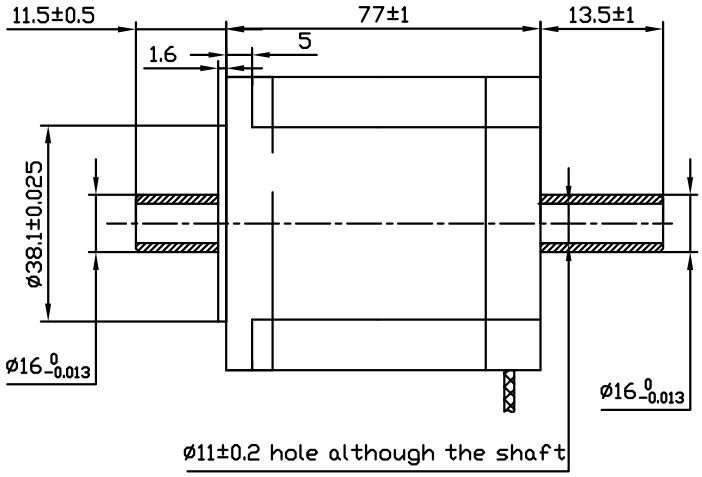

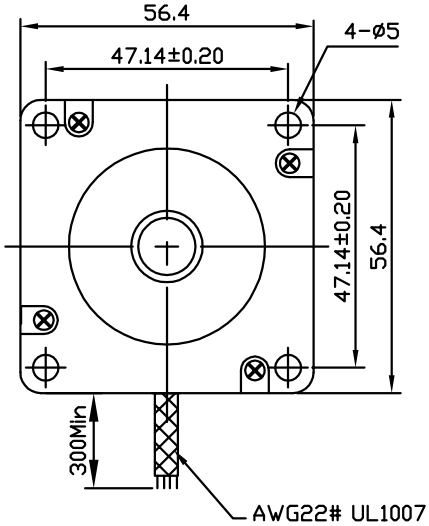

1	Motorlänge geändert am 10.08.2005.							
REV.	QTY.	NO.	SIG.		surfacetreat			
DESIGN					NANOTEC.	CLS.MAK	WEIGHT	SCALE
CHECK					ST5918L3008-LA1			
PROC.								
DT.	10.08.2005				MATERIAL:	PAGE:	OF	PAGES
STD.						ST5918L3008-LA1_Z02		
APPROVE								